DO NOT SCALE FROM THIS DRAWING
Electronic drawings once printed, are uncontrolled and may become out-dated. Refer to Aconex for current revision.
TIMESTAMP 09/02/2018 21:06:33
BIM MODEL M-BAR-1F4TS0-CB00-BIM-000003-Structure.rvt

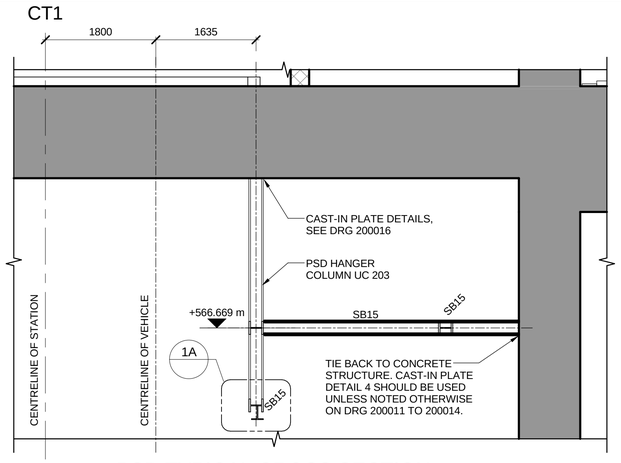

1 PSD TYPICAL CROSS SECTION
1 : 50

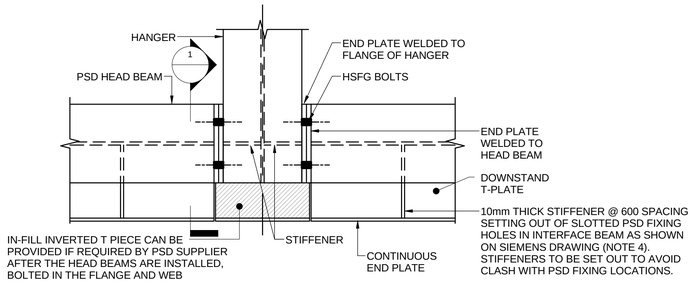

3 PROPOSED PSD HEAD BEAM TO HANGER CONNECTION
1 : 10

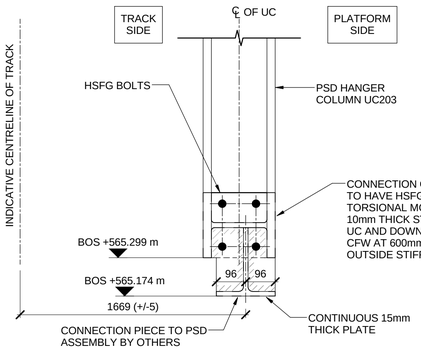

1A DETAIL A
1 : 10

NOTES:

1. ALL DIMENSIONS SHOWN IN MILLIMETERS (mm) UNLESS NOTED OTHERWISE.
2. FOR GENERAL NOTES REFER TO DRAWING No. M-BAR-000DS0-CB00-EDR-990004 TO 990006.
3. FOR ABBREVIATION LIST REFER TO DRAWING No. M-BAR-000DS0-CB00-EDR-990007.
4. FOR SETTING OUT OF PSD FIXING TO INTERFACE BEAM REFER TO SIEMENS DRAWINGS M-BSM-1F4DS0-SP00-EDR-000082 TO 000085, 000516 & 001516.
5. ALL PSD STEEL FRAME ARE 2-HOUR FIRE RATED UNLESS NOTED OTHERWISE.

INDEX DRAWING 000009

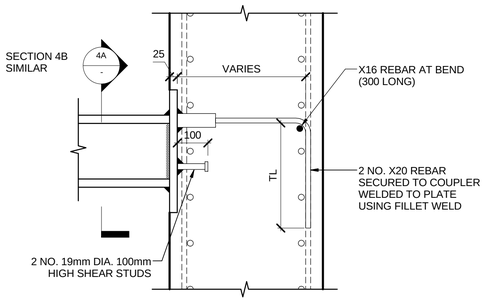

4 CAST IN PLATE DETAIL WITH WALL
1 : 10

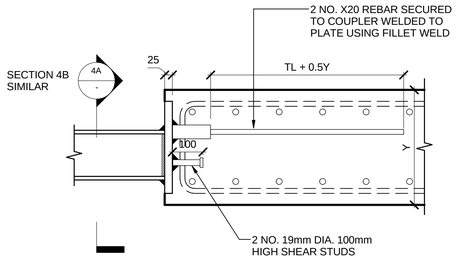

4. CAST IN PLATE DETAIL WITH SLAB
1 : 10

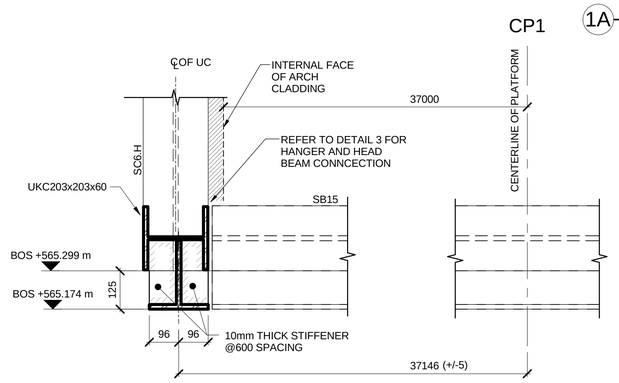

5 PED HEAD BEAM DETAILS
1 : 10

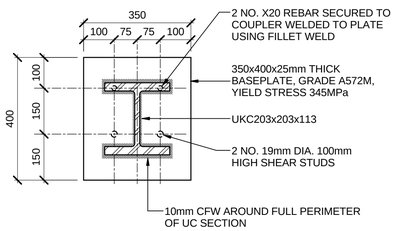

4A ELEVATION 4A
1 : 10

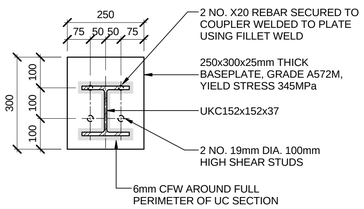

4B ELEVATION 4B
1 : 10

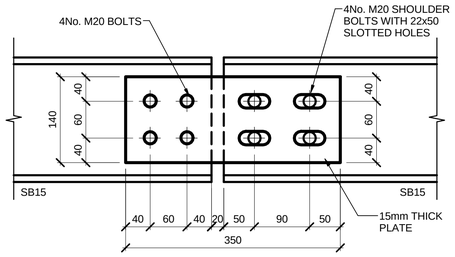

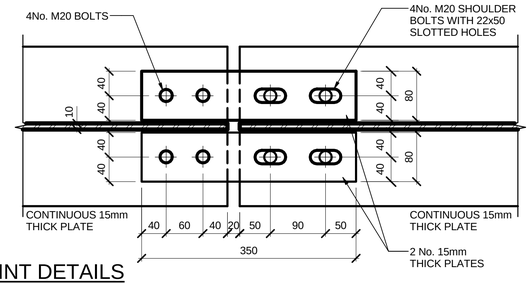

6 AXIAL RELEASED JOINT DETAILS
1 : 5

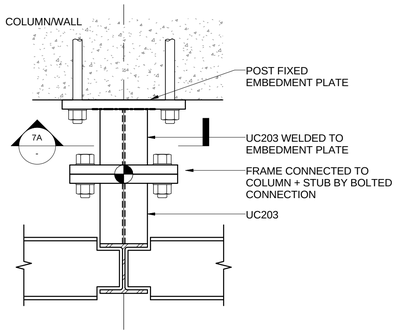

7 PFP - POST FIXED PLATE DETAIL (PLAN VIEW)
1 : 10

**NOT APPLIED TO HANGER COLUMN

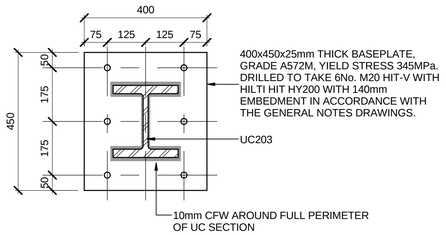

7A POST FIXED END PLATE DETAIL - UC203
1 : 10

**NOT APPLIED TO HANGER COLUMN

REVISIONS

No	Date	Description	Drawn	Checked	Approved
000	04/09/2017	ISSUED FOR CONSTRUCTION	GB	CL	JB
001	09/02/2018	ISSUED FOR CONSTRUCTION	GB	CL	JB

PROJECT: قطار الرياض riyadh metro

CLIENT: الهيئة العليا لتطوير مدينة الرياض

© 2015 High Commission for the Development of ArRiyadh

BACS CONSORTIUM: BACS RIYADH METRO PROJECT
www.bacsrmp.com

BACS APPROVAL: BACS Consortium for Riyadh Metro Project — This drawing has been Approved and Certified as acceptable on behalf of the BACS Consortium.

LEAD DESIGN ENTITY (LDE)

APPROVED BY LDE	DRAWN BY	CHECKED BY	APPROVED BY
NAME	NAME G.BROGIOLO	NAME C.LAM	NAME J.BATCHELOR
DATE	DATE 09/02/2018	DATE 09/02/2018	DATE 09/02/2018

SCALE: As indicated
PAPER SIZE: A1

DRAWING STATUS: ISSUED FOR CONSTRUCTION

CONSULTANT / SUB-CONTRACTOR: ARUP

DRAWING TITLE:
DEEP UNDERGROUND STATION
LINE 1 - TRANSFER STATION 1F4
STRUCTURE
PSD FRAME GA & DETAILS
SHEET 1

DRAWING NUMBER: M-BAR-1F4TS0-CB00-EDR-200015
REVISION: 001

001 v02

(WF-084040) - DCC Iconic Station - 09/04/2018